PACIFIC CORP 444 #7999607

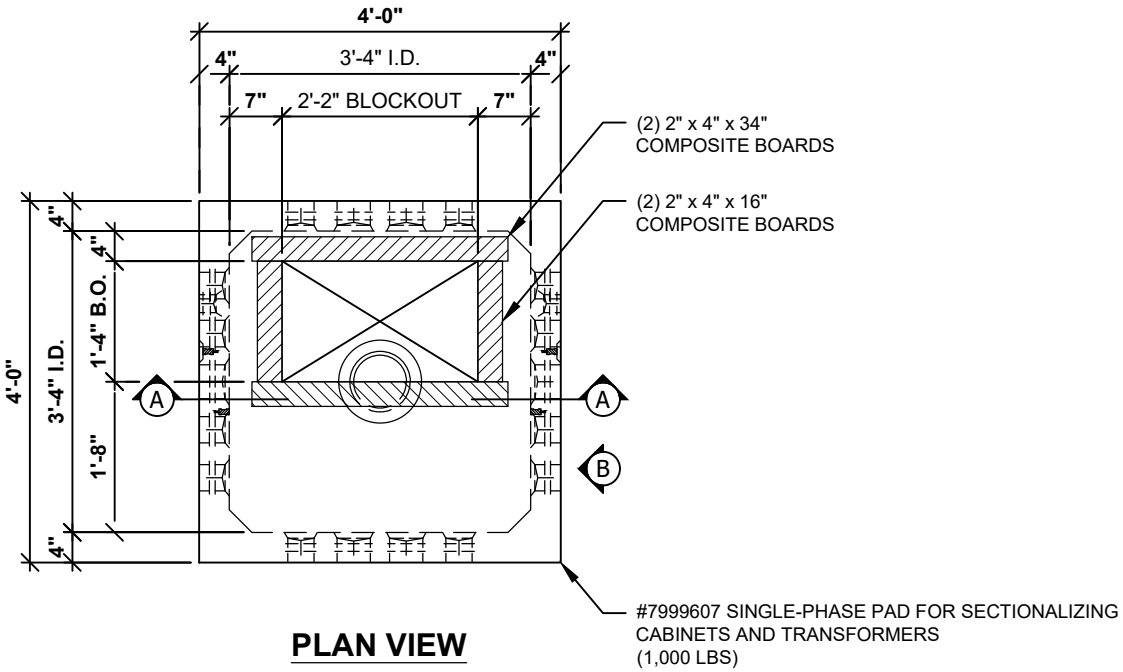

PLAN VIEW

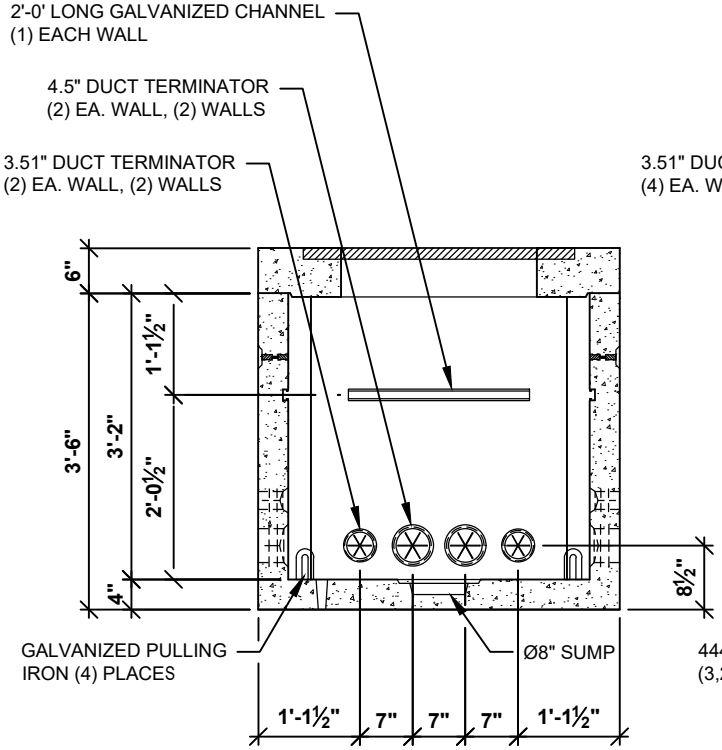

SECTION A-A

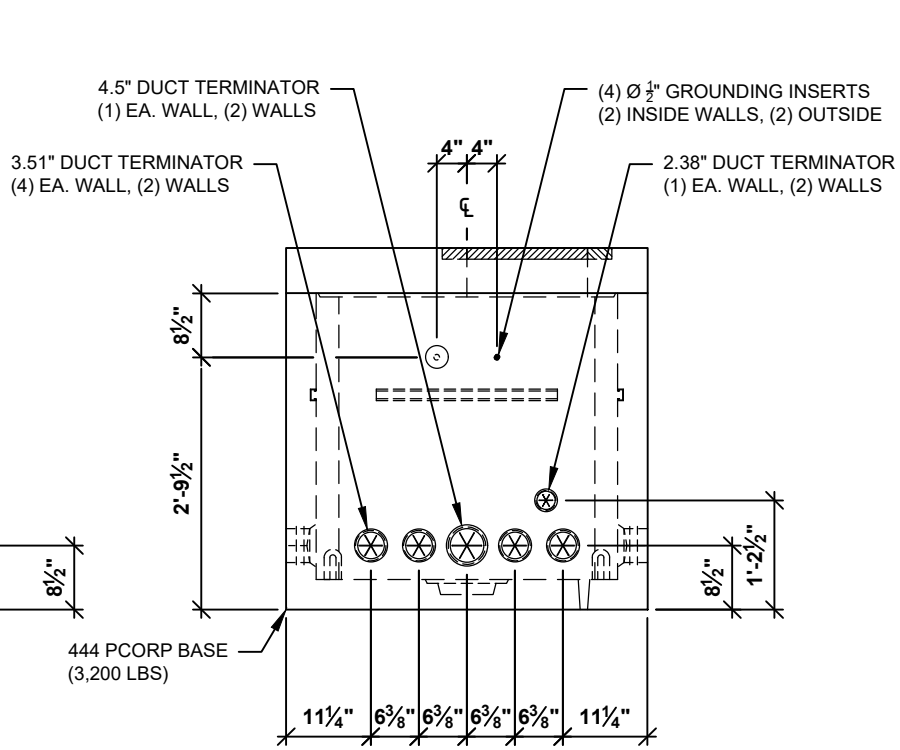

VIEW - B

NOTES:
1. WEIGHTS LISTED ARE APPROXIMATE.

PCORP ZG501 06-13-13

Rogue Valley Precast
SMART certified
Phone: (541) 538-2500 Fax: (541) 538-2504
Email: sales@rvpor.com
Web: rvpor.com